VECTORWORKS EDUCATIONAL VERSION

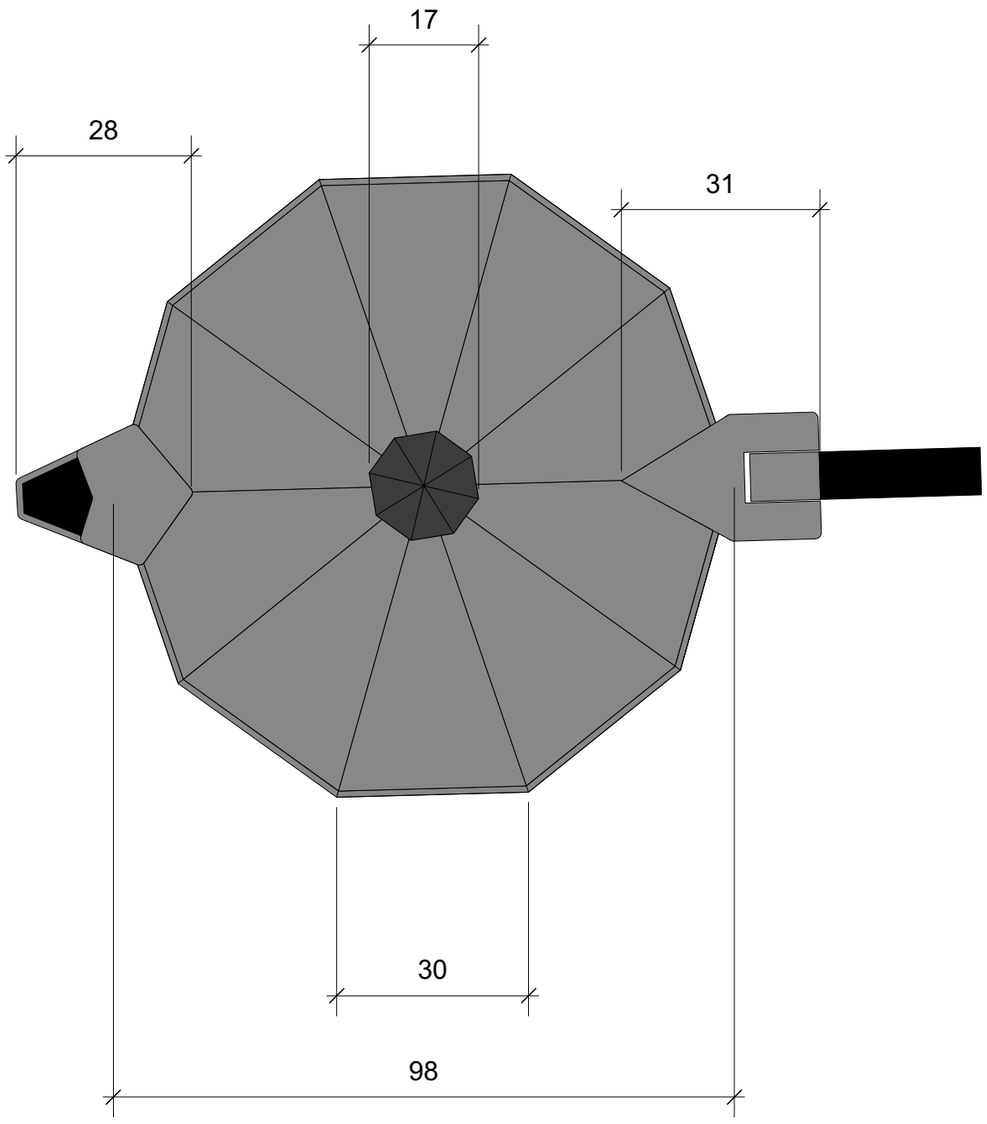

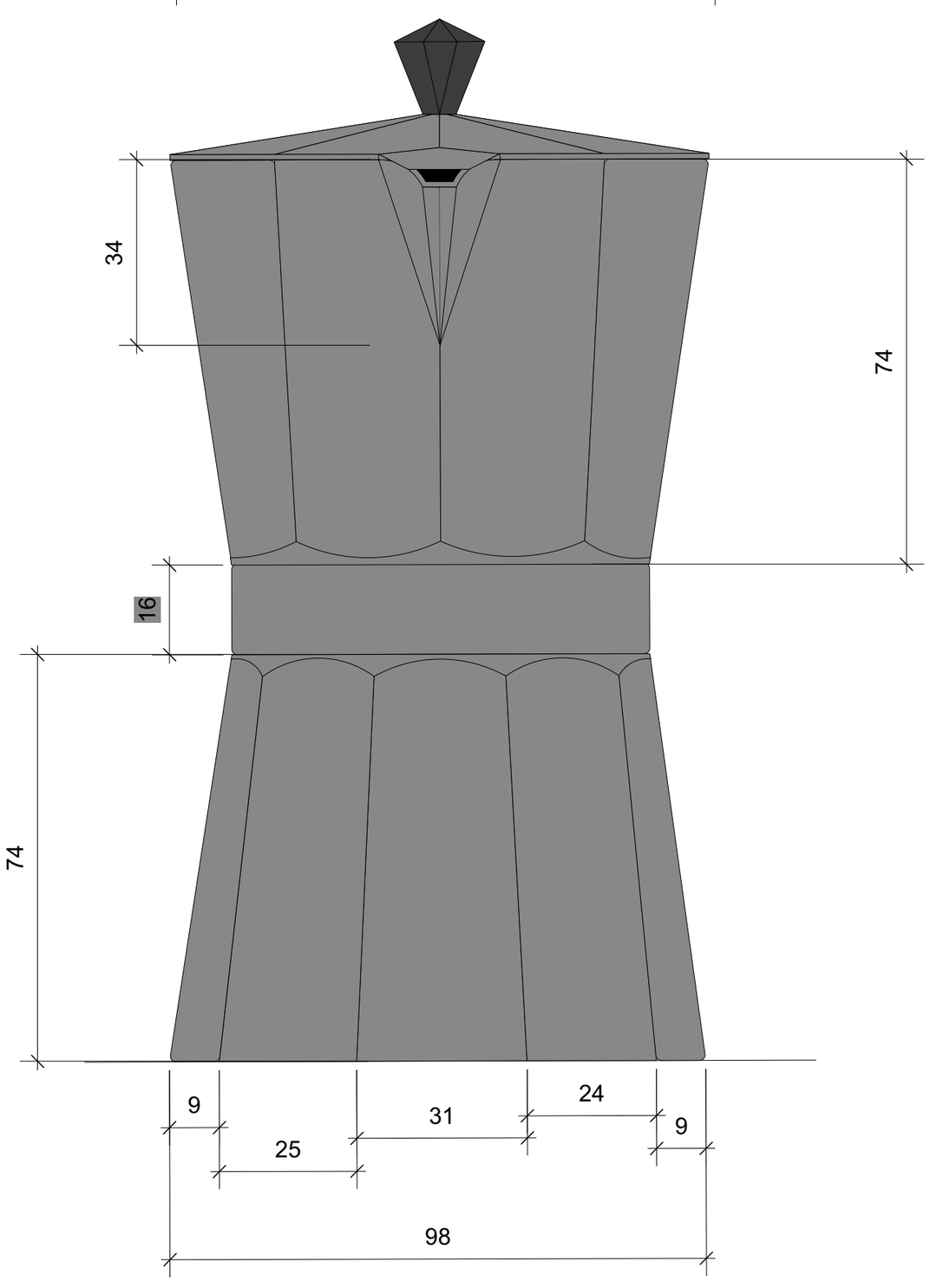

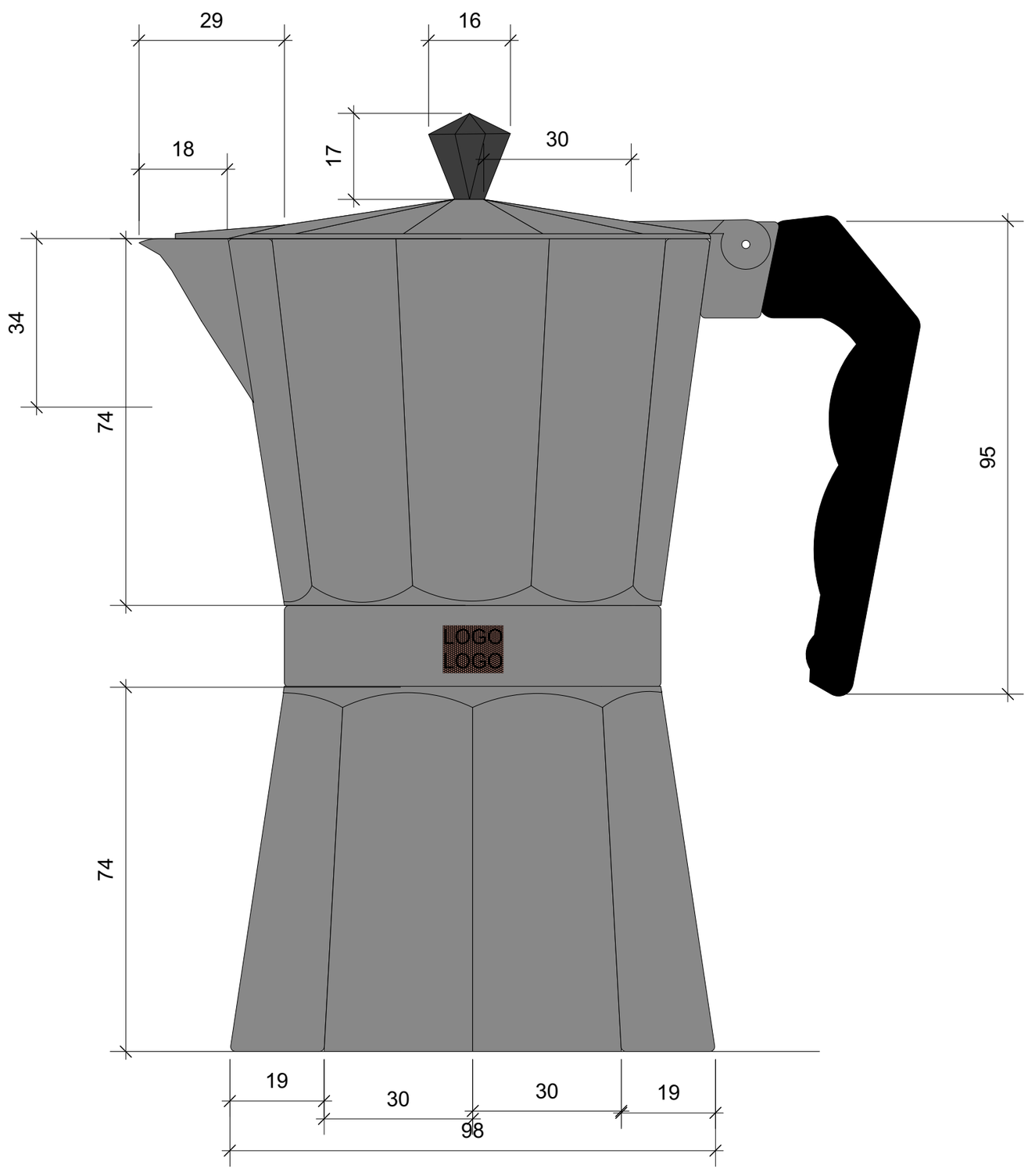

VECTORWORKS EDUCATIONAL VERSION